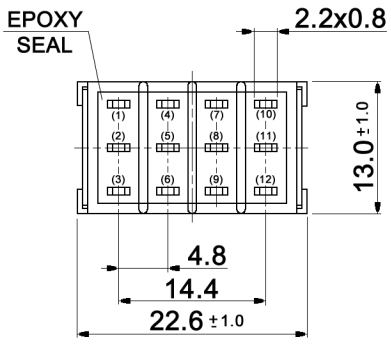

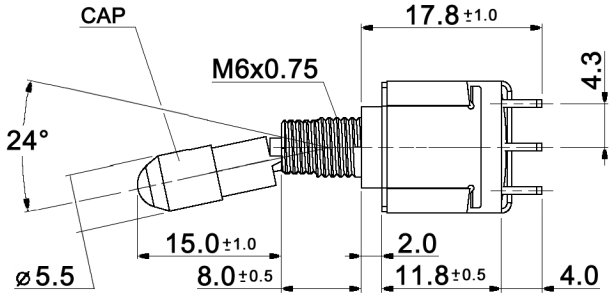

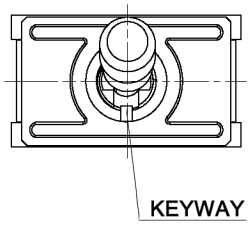

PANEL MOUNTING

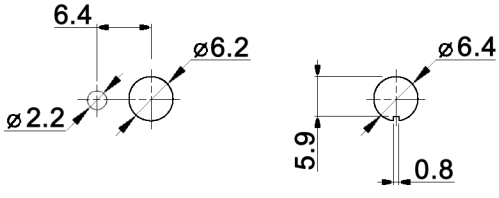

CONTACT ARRANGEMENT

code for x	function	toggle towards keyway	toggle opposite to keyway
N	On-On	1-2, 4-5, 7-8, 10-11	2-3, 5-6, 8-9, 11-12

code for x	function	toggle towards keyway	toggle in center	toggle opposite to keyway
P	On-Off-On	1-2, 4-5, 7-8, 10-11	open	2-3, 5-6, 8-9, 11-12
PA	On-On-On	1-2, 4-5, 7-8, 10-11	2-3, 4-5, 7-8, 11-12	2-3, 5-6, 8-9, 11-12

Specifications:

Contact rating:	3A, 250V AC / 6A, 125V AC 4A, 30V DC / 5A, 12V DC 6A, 6V DC
Contact resistance:	20mOhm max.
Insulation resistance:	1 000MOhm min. at 500V DC
Dielectric strength:	1 500V, 50Hz for the duration of 1 minute
Operating temperature:	-45°C to +140°C
Mechanical life:	min. 200 000 cycles
Soldering conditions:	hand-soldering: max.: 420°C, 3sec., 60W auto-soldering: max.: 270°C, 5sec.
Mounting instruction:	max. torque: 49Ncm
Material:	Terminal: brass, C1020 silver plated Case: DAP Housing: stainless steel, CNS9265 Bushing: copper alloy, C3604BD nickel plated Actuator: copper alloy, C3604BD chrome plated Cap: aluminium
Included accessories:	2 pcs. nut M6x0.75, nickel plated, 9mm wrench size 1 pc. tooth washer 1 pc. locking washer Cap is not included

Compliance: RohS II (2011/65/EU)

Tolerances: 0.00: ±0.25mm 0.0: ±0.40mm			Date	Name	MTL 406 x
			03/10	dr	
Revised	10/17	dr	knitter-switch	30 20 27	Page
Panel mounting	05/10	dr			1/1
Modifications	Date	Name			